AUTOMATION FOR SLIDING GATES

741 E

230V Gearmotor

MAX. LEAF WEIGHT
900 Kg

MAX SPEED
12 m/min.

USE FREQUENCY (CYCLES/HOUR)
30

PRODUCT'S PLUS

- Redesigned look, timeless elegance: the new design represents the natural evolution of an iconic FAAC Product.
- Easy programming thanks to the display and to the prewired control unit.
- Magnetic limit switch.
- Integrated encoder with reverse function upon obstacle detection and specific management in opening and slow down.

INSTALLATION DIMENSIONS

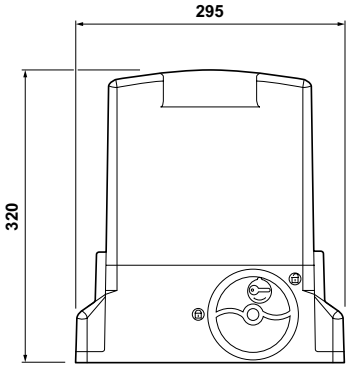

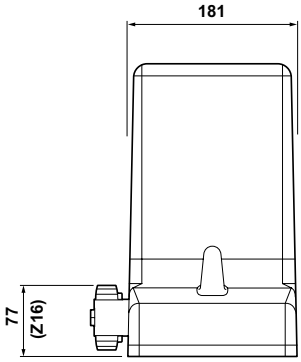

AUTOMATION FOR SLIDING GATES

741 E

230V Gearmotor

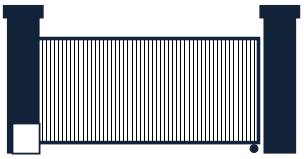

TECHNICAL SPECIFICATIONS

Model	741 E Z16 with encoder
Power supply voltage	220-240V~ 50/60 Hz
Electric motor	Asynchronous single phase
Max. power	600 W
Max. torque	24 Nm (*)
Max expressed force	680 N (*)
Reduction ratio	1:25
Max. leaf width	15 m
Leaf speed	12 m/min
Speed adjustment and motor control	No
Limit switch	Magnetic
Pinion	Z16 module 4
Encoder	Optical encoder
Force adjustment	Via electronic control board
Operating ambient temperature	-20°C ÷ +55°C
Thermal protection	140°C self-restoring
Protection class	IP44
Weight	13,1 Kg
Dimensions (LxDxH)	295 x 181 x 320 mm
Max. leaf weight	900 Kg
Use frequency	30 cycles/h
Electronic equipment	740D incorporated
Release device	Rotating release knob - coded key
Thrust capacitor	12,5 µF

(*) data referred to 230V~ 50Hz.

safe zone

CE

INSTALLATION EXAMPLE

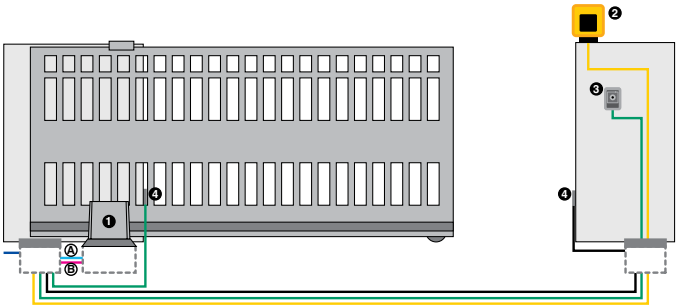

A Low voltage cabling
2x0,50 mm² cable
3x0,50 mm² cable

B Power cabling (230V)
2x1,5 mm² +T cable
2x1,5 mm² cable

REF	Q.TY	DESCRIPTION
1	1	741 E Z16 Gearmotor with built-in electronic control unit, encoder and foundation plate
1	4	Galvanised rack 30x8 mod. 4 including weld-on fittings (4 pcs pack, 1 m each)
1	1	Plug in receiver 1 channel RP 433 SLH
2	1	XLED flashing light
3	1	Key operated button XK10
3	1	Lock with key
4	1	Pair of photocells XP 20D
	1	2 channels transmitter XTO2 433

Note